ohmcraft APPLICATION NOTE

Contact us: sales@ohmcraft.com 585-624-2610

High Frequency Attributes

An increasing number of electronic products, such as mobile phones, amplifiers, filters and satellite decoders operating at RF frequencies as high as 20GHz require surface mount components that exhibit stable and predictable performance. OhmCraft's chip resistors feature non-inductive design and minimal stray capacitance and thus are excellent candidates for these applications.

Modeling Frequency Characteristics

The electrical model of a chip resistor, when attached to circuit board, is shown in Figure 1. C_a is the basic "lead attach" capacitance that appears between the end termination of the resistor and ground. The actual value of C_a is determined by many factors including the physical design of the circuit board attachment pad, and the type of circuit board material. C_i is the internal stray capacitance of the chip resistor, and is function of the ceramic dielectric on which the resistor is constructed. The L is the internal inductance, and R is the nominal resistance value.

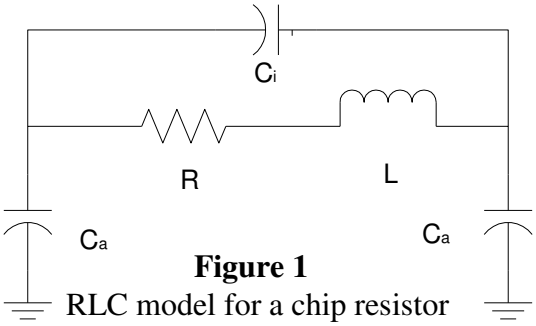

Figure 1
RLC model for a chip resistor

Test Results

Tests were conducted on resistors that were attached with solder to a circuit board and the total capacitance (C_i and C_a) was measured on a Wayne – Kerr type 650 bridge at a 10 KHz carrier frequency. The measured capacitance was in the 0.030 to 0.050 picofarad range and negligible inductance (L) was observed. This compares with 1 picofarad, or more, for typical chip resistors. This relatively low capacitance enables the use of OhmCraft chip resistor in high frequency applications where higher performing designs are required.